2. Datum Points

A: LOCATION

NOTE:
- Datum points are specified for body repair.
- Guide holes, locators, and indents are provided to facilitate panel replacement and to increase alignment accuracy.
- Both right and left reference points are symmetrical.

1. WAGON MODEL/SEDAN MODEL

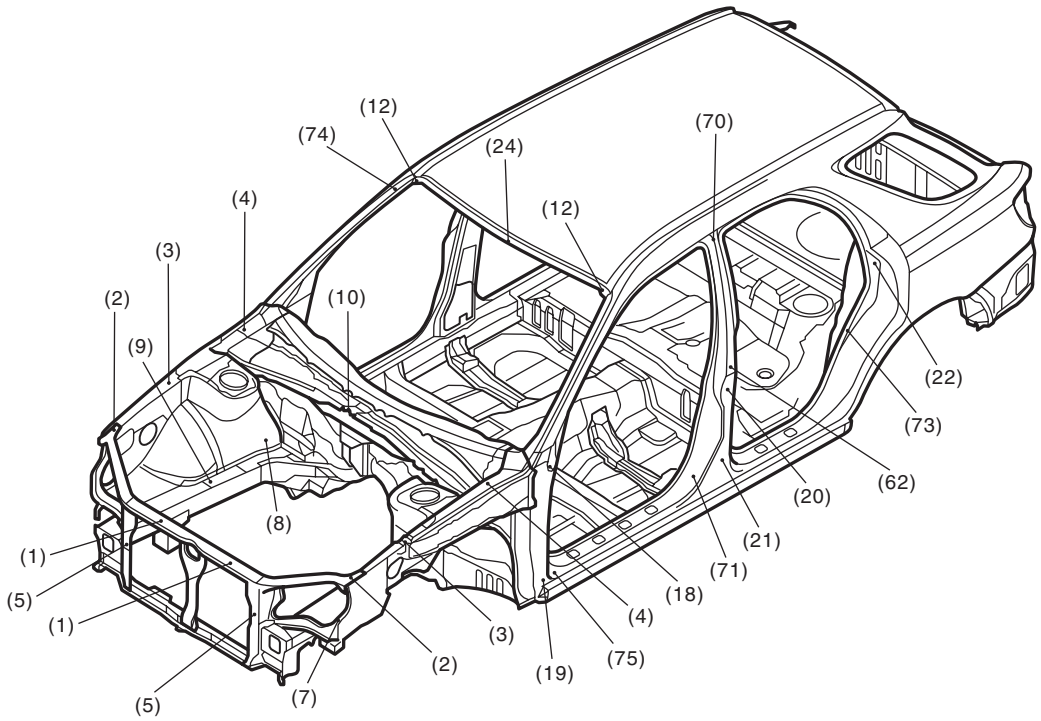

(1) Radiator attaching hole 12 mm (0.47 in) dia. (symmetrical)

(2) Fender attaching hole 7 mm (0.28 in) dia. (symmetrical)

(3) Fender attaching hole 10 mm (0.39 in) dia. (symmetrical)

(4) Front hood hinge attaching hole 12 mm (0.47 in) dia. (symmetrical)

(5) Radiator panel side gauge hole 20 mm (0.79 in) dia. (symmetrical)

(7) Fender attaching hole 9.5 mm (0.37 in) dia. (symmetrical)

(8) Gauge hole 12 mm (0.47 in) dia. (symmetrical)

(9) Front suspension crossmember attaching hole 12.4 mm (0.488 in) dia. (symmetrical)

(10) Bracket module center gauge hole 6 mm (0.24 in) dia. (vehicle center)

(12) Front glass attaching hole RH 6.5 mm (0.256 in) dia. LH 6.5 × 10 mm (0.256 × 0.39 in) dia.

(18) Fender attaching hole 12 mm (0.47 in) dia. (symmetrical)

(19) Fender attaching hole 12 mm (0.47 in) dia. (symmetrical)

(20) Outer panel center pillar gauge hole 12 mm (0.47 in) dia. (symmetrical)

(21) Outer panel center pillar gauge hole 12 mm (0.47 in) dia. (symmetrical)

(22) Weather strip patch attaching hole 5.2 mm (0.205 in) dia. (symmetrical)

(24) Roof panel repair locator hollow

(62) Belt anchor attaching hole 11 mm (0.43 in) dia. (symmetrical)

(70) Trim clip attaching hole 8.5 mm (0.335 in) dia. (Symmetrical)

(71) Harness clip attaching hole 7 mm (0.28 in) dia. (symmetrical)

(73) Harness clip attaching hole 7 mm (0.28 in) dia. (symmetrical)

(74) Trim clip attaching hole 10 mm (0.39 in) dia. (symmetrical)

(75) Insulator attaching hole 8 mm (0.31 in) dia. (symmetrical)

2. WAGON MODEL (REAR)

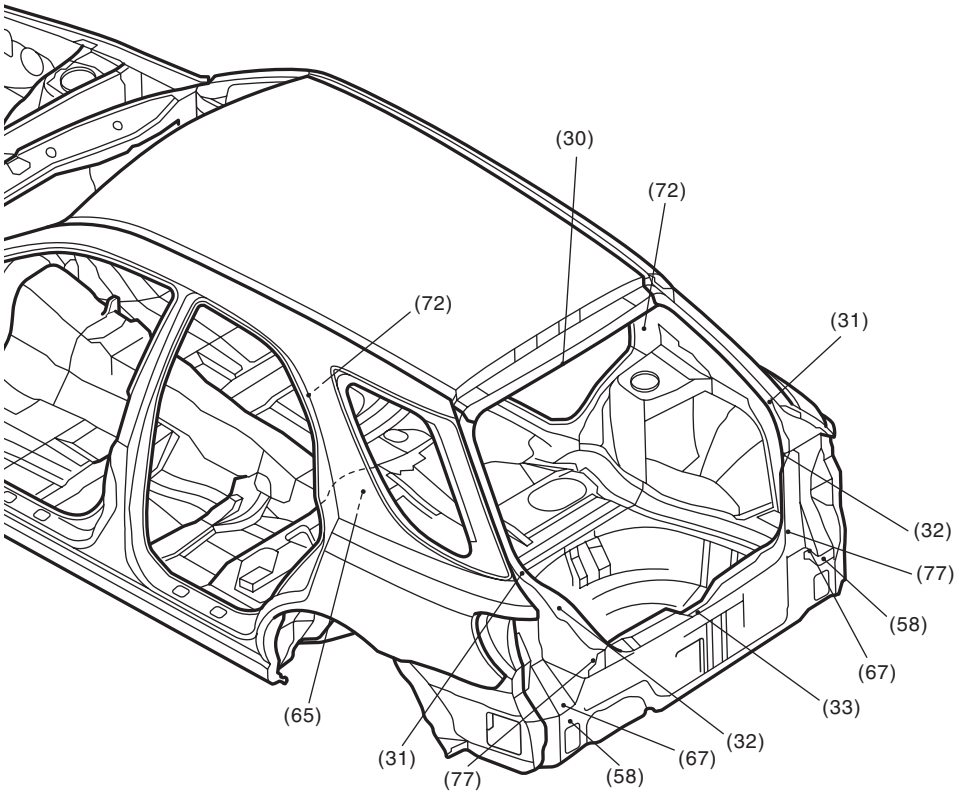

(30) Child anchor attaching hole 11 mm (0.43 in) dia.

(31) Washer hose attaching hole LH 7 mm (0.28 in) dia.

(32) Rear combination light mounting hole 7 mm (0.28 in) dia. (symmetrical)

(33) Two striker attaching hole 15 mm (0.59 in) dia.

(58) Rear bumper beam plate nut attaching hole 13 mm (0.51 in) dia. (symmetrical)

(65) Floor mat clip attaching hole 8 mm (0.31 in) dia.

(67) Rear side gusset floor gauge hole 11.5 mm (0.453 in) dia. (symmetrical)

(72) Trim upper clip attaching hole 8.5 mm (0.335 in) dia. (symmetrical)

(77) Harness clip attaching hole 7 mm (0.28 in) dia. (symmetrical)

3. SEDAN MODEL (REAR)

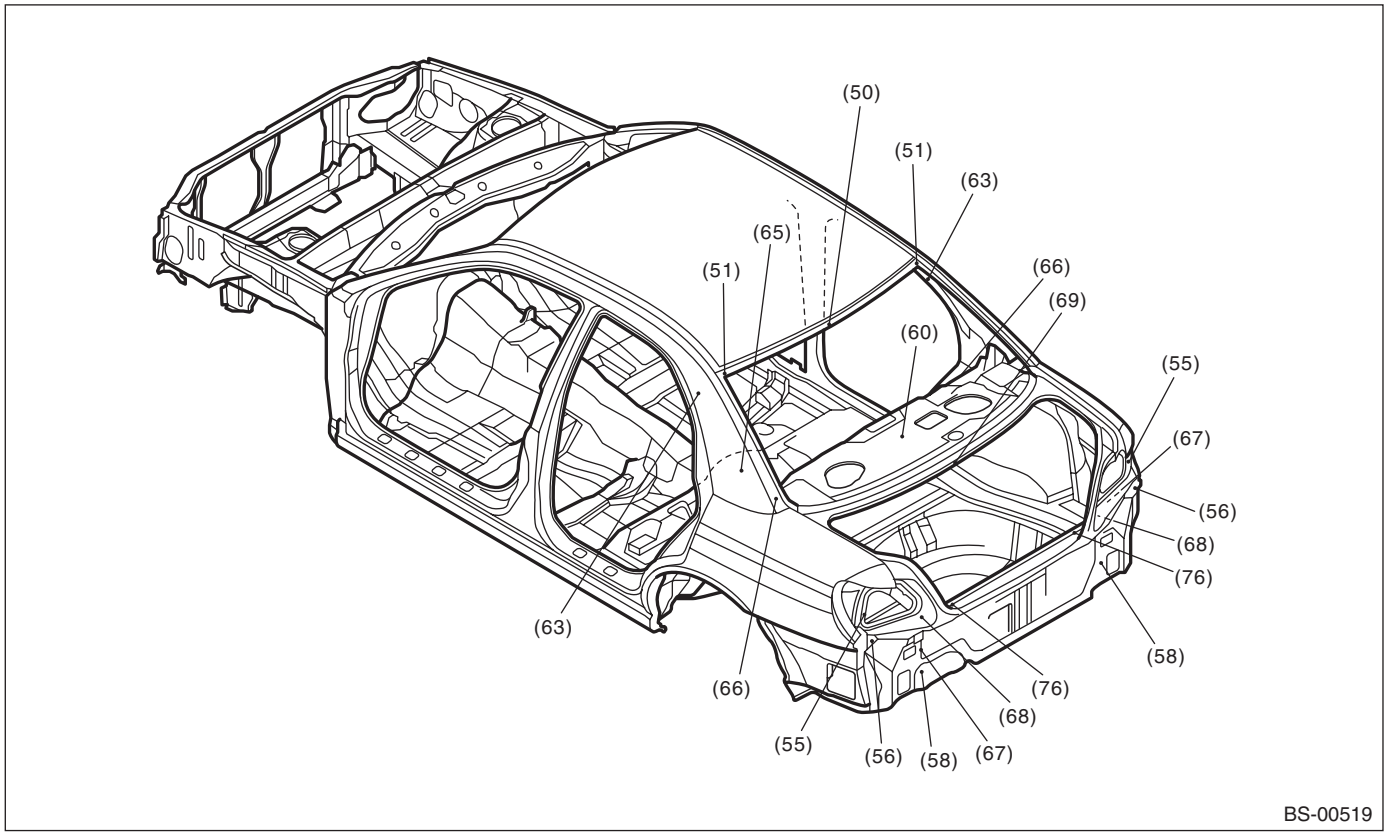

(50) Repair locator hollow (vehicle center)

(51) Glass attaching hole RH 6.5 mm (0.256 in) dia. LH 6.5 × 10 mm (0.256 × 0.39 in) dia.

(55) Rear combination light mounting hole 8 mm (0.31 in) dia. (symmetrical)

(56) Bumper attaching hole 7 mm (0.28 in) dia. (symmetrical)

(58) Rear bumper attaching hole 11 mm (0.43 in) dia. (symmetrical)

(60) Choke coil harness attaching hole 5.4 mm (0.213 in) dia.

(63) Feeder line fixing hole 7 mm (0.28 in) dia. (symmetrical)

(65) Floor mat clip attaching hole 8 mm (0.31 in) dia.

(66) Bulkhead rear gauge hole 10 mm (0.39 in) dia. (symmetrical)

(67) Rear side gusset floor gauge hole 11.5 mm (0.453 in) dia. (symmetrical)

(68) Rear skirt inner side gauge hole 10 mm (0.39 in) dia. (symmetrical)

(69) Rear panel (reinforcement) repair locator hollow (vehicle center)

(76) Press location hole 15 mm (0.59 in) dia. (symmetrical)

4. UNDERBODY

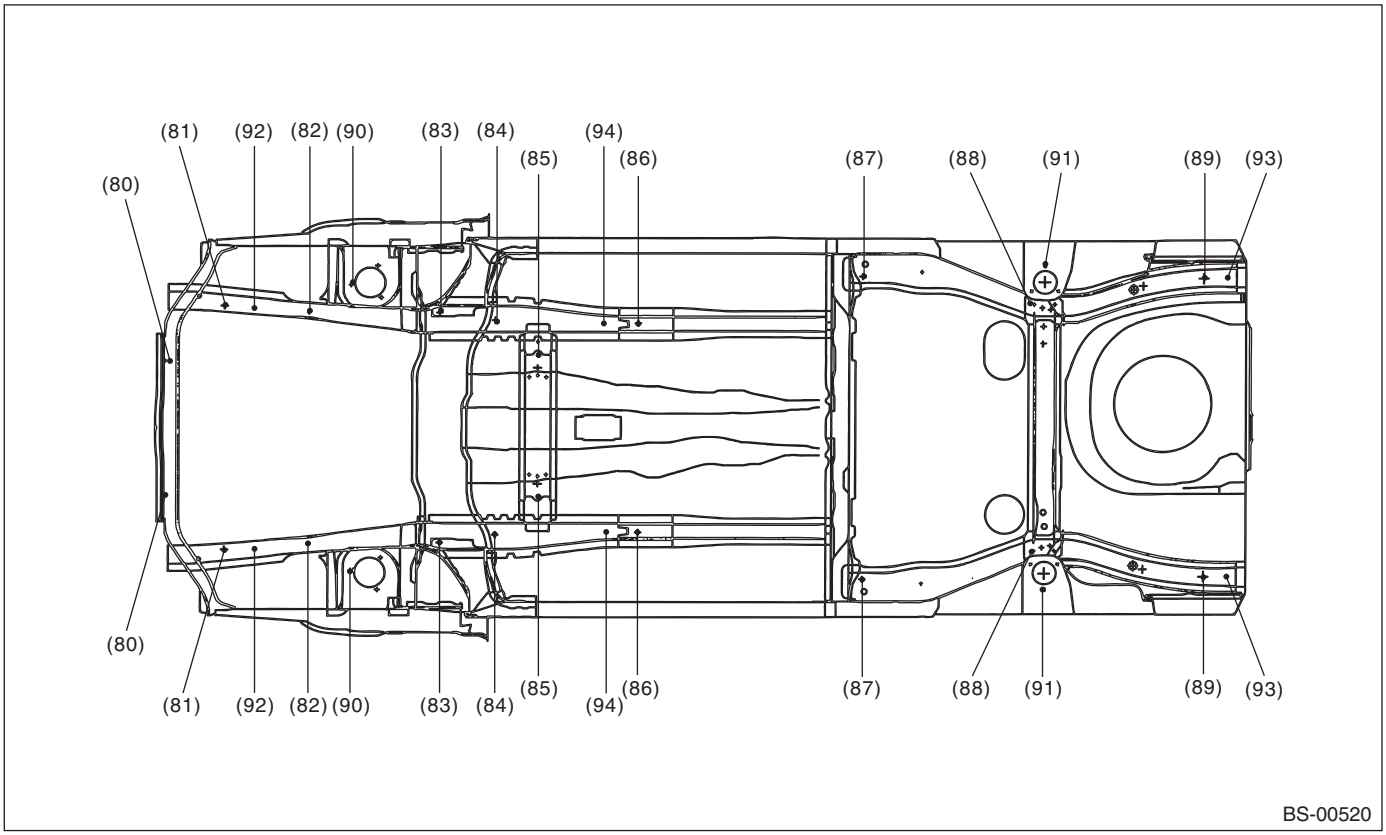

(80) Radiator lower frame gauge hole 12 mm (0.47 in) dia. (symmetrical)

(81) Side frame gauge hole 20 mm (0.79 in) dia. (symmetrical)

(82) Front crossmember attaching hole 12.4 mm (0.488 in) dia. (symmetrical)

(83) Suspension attaching hole 17 mm (0.67 in) dia. (symmetrical)

(84) Side frame gauge hole 20 mm (0.79 in) dia. (symmetrical)

(85) Transmission mount attaching hole 14 mm (0.55 in) dia.

(86) Side frame gauge hole 18 mm (0.71 in) dia. (symmetrical)

(87) Rear differential attaching hole 16 mm (0.63 in) dia. (symmetrical)

(88) Rear suspension attaching hole 16 mm (0.63 in) dia. (symmetrical)

(89) Rear side frame gauge hole 15 mm (0.59 in) dia. (symmetrical)

(90) Strut mount attaching hole 9.5 mm (0.374 in) dia. (symmetrical)

(91) Strut mount attaching hole 10 mm (0.39 in) dia. (symmetrical)

(92) Sub frame attaching hole 16 mm (0.63 in) dia. (symmetrical)

(93) Bumper beam attaching hole RH 15 mm (0.59 in) dia.
LH 19 × 15 mm (0.75 × 0.59 in) dia.

(94) Side frame gauge hole 15 mm (0.59 in) dia. (symmetrical)

Datum Points

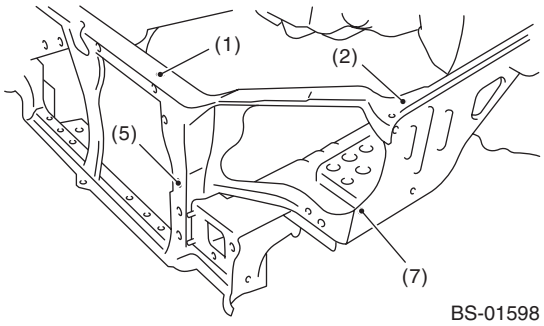

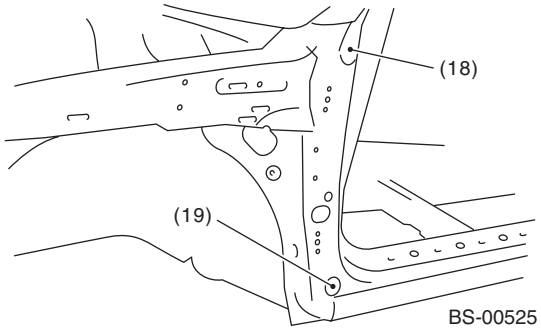

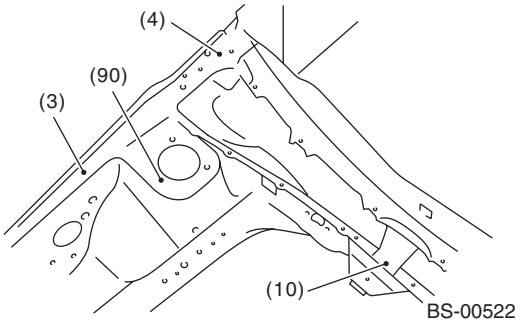

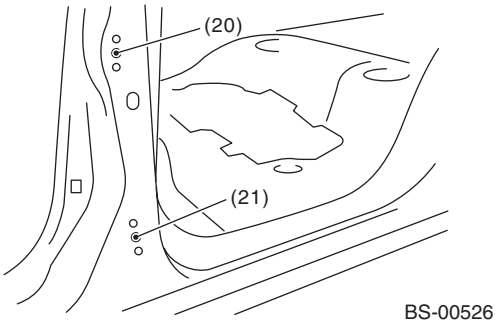

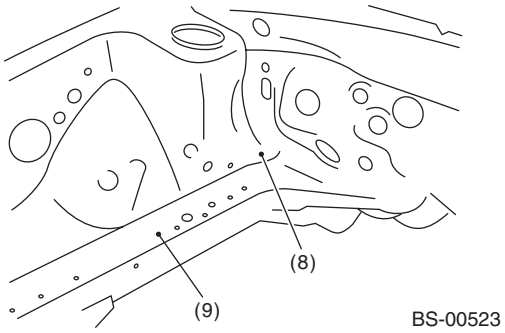

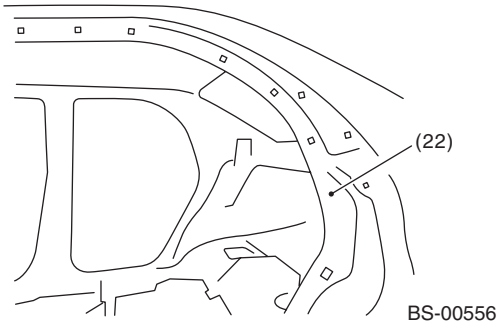

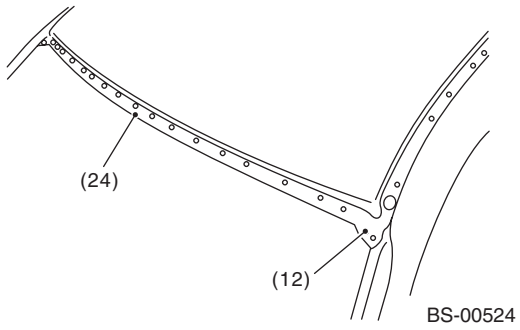

Wagon model

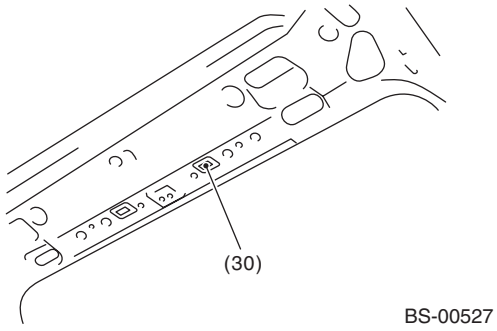

Datum Points

Wagon model

Sedan model

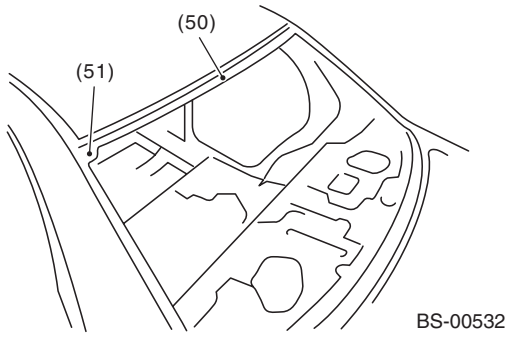

Wagon model

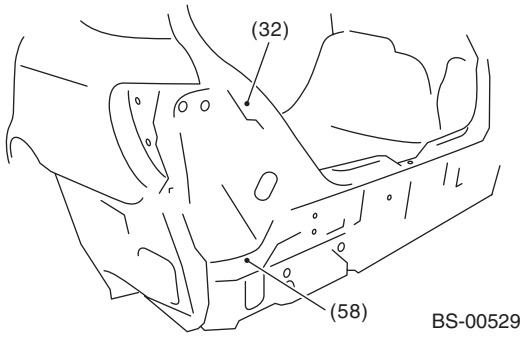

Sedan model

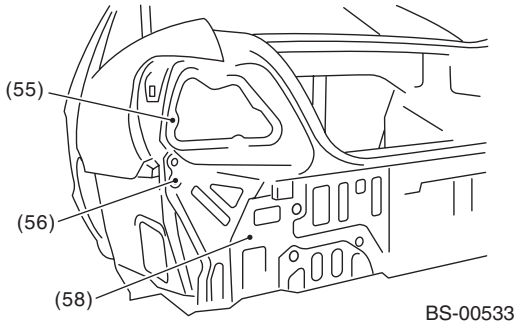

Wagon model

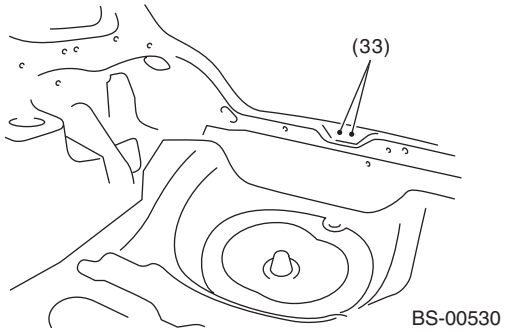

Sedan model

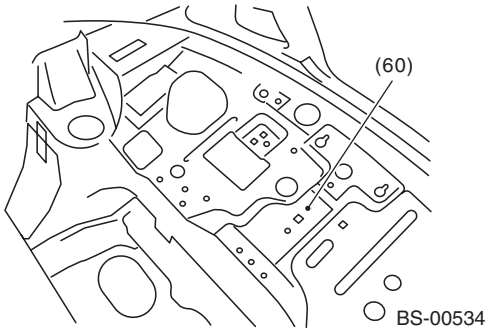

Sedan model

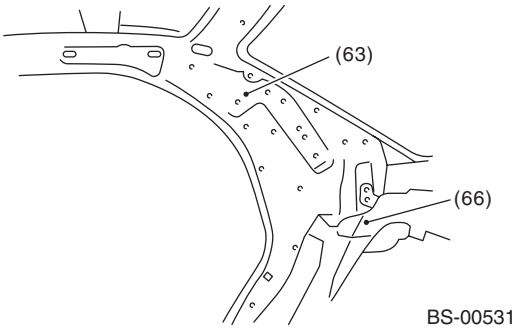

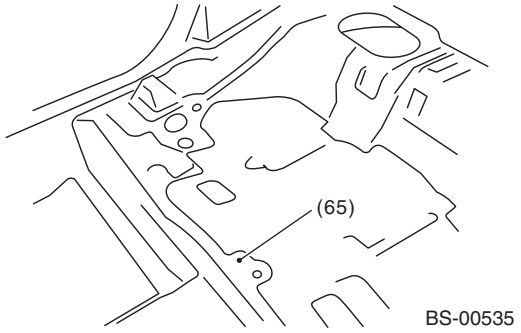

Datum Points

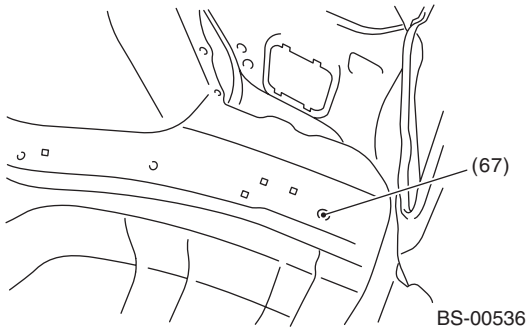

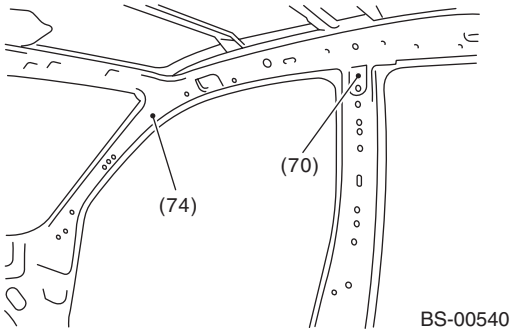

Sedan model

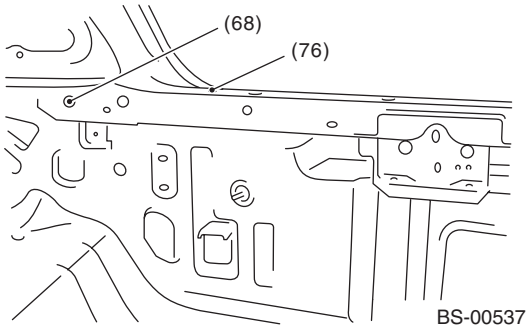

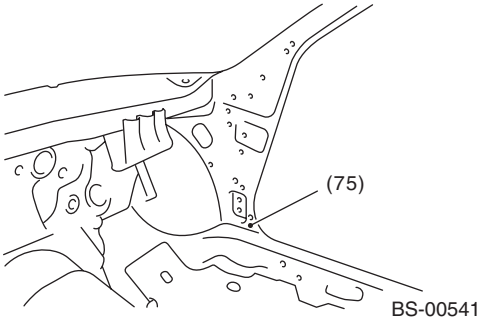

Sedan model

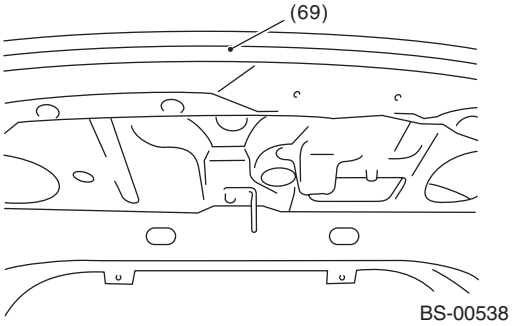

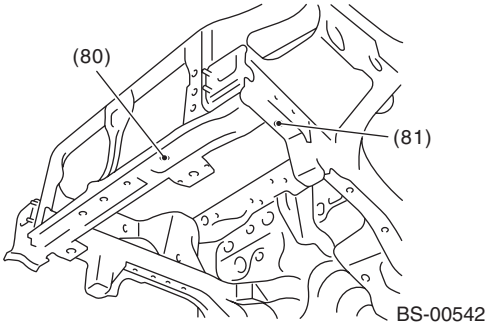

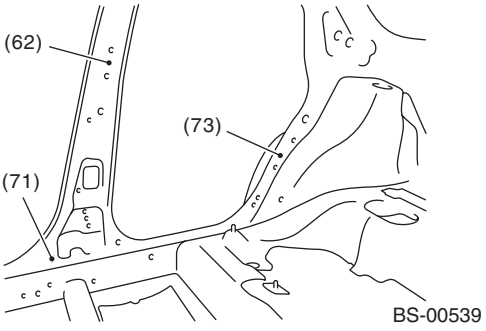

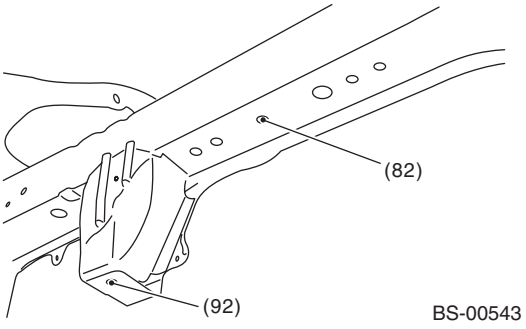

Datum Points

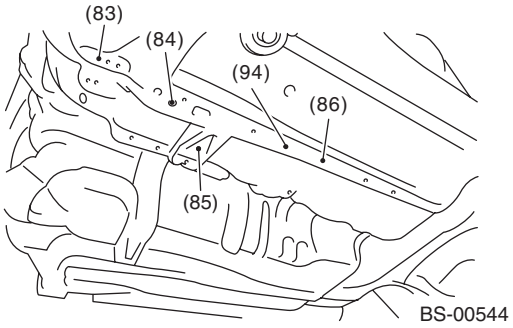

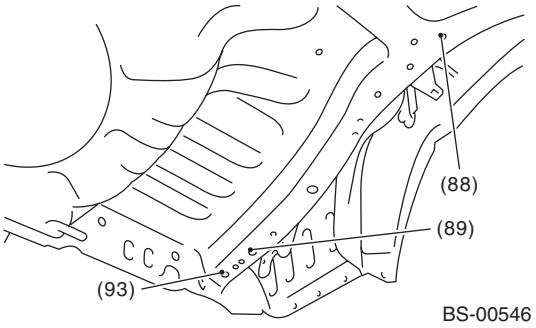

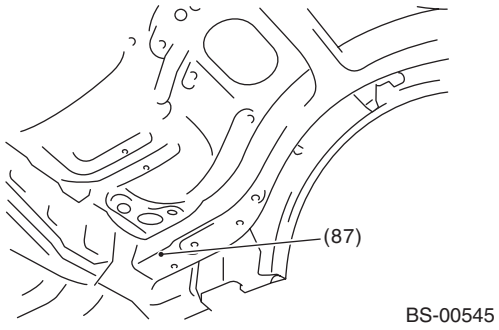

3. Datum Dimensions

A: MEASUREMENT

For details concerning points to measure, refer to “LOCATION“. <Ref. to BS-3, LOCATION, Datum Points.>

NOTE:
- Using a tram tracking gauge, measure all the dimensions.
- When using a tape measure, carefully measure dimensions without letting the tape measure sag or twist.
- Measure the linear dimensions between cores of holes.
- Suffixes “RH” and “LH” indicate right-hand and left-hand.

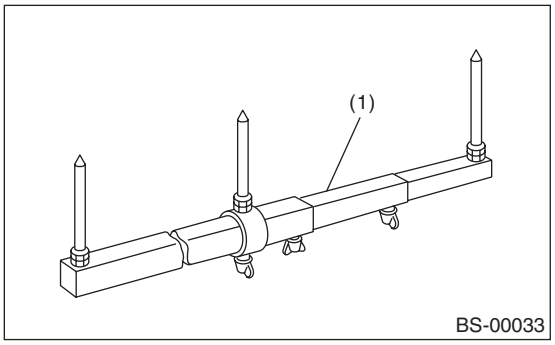

(1) Tram tracking gauge

- Measure at the center of the circle around the outside of the body panel.

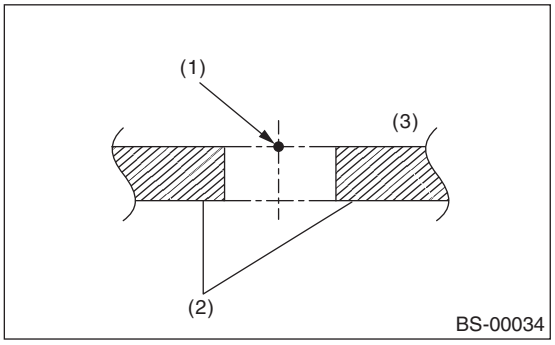

(1) Datum points
(2) Body panel
(3) Outside